NOTES:

1. ALLOW AN EXTRA 60 mm FOR CABLE BEND RADIUS AND CONNECTOR UNPLUGGING.
2. MOUNTING SCREWS MUST NOT PROTRUDE INTO THE BODY MORE THAN 4mm TO AVOID ANY INTERFERENCE WITH THE INTERNAL COMPONENTS.
3. THESE SET SCREWS, LOCKING AND ADJUSTING SCREWS MUST BE ACCESSIBLE AFTER INSTALLATION FOR THE FINAL, IN FIELD, CALIBRATION OF THE SENSOR.

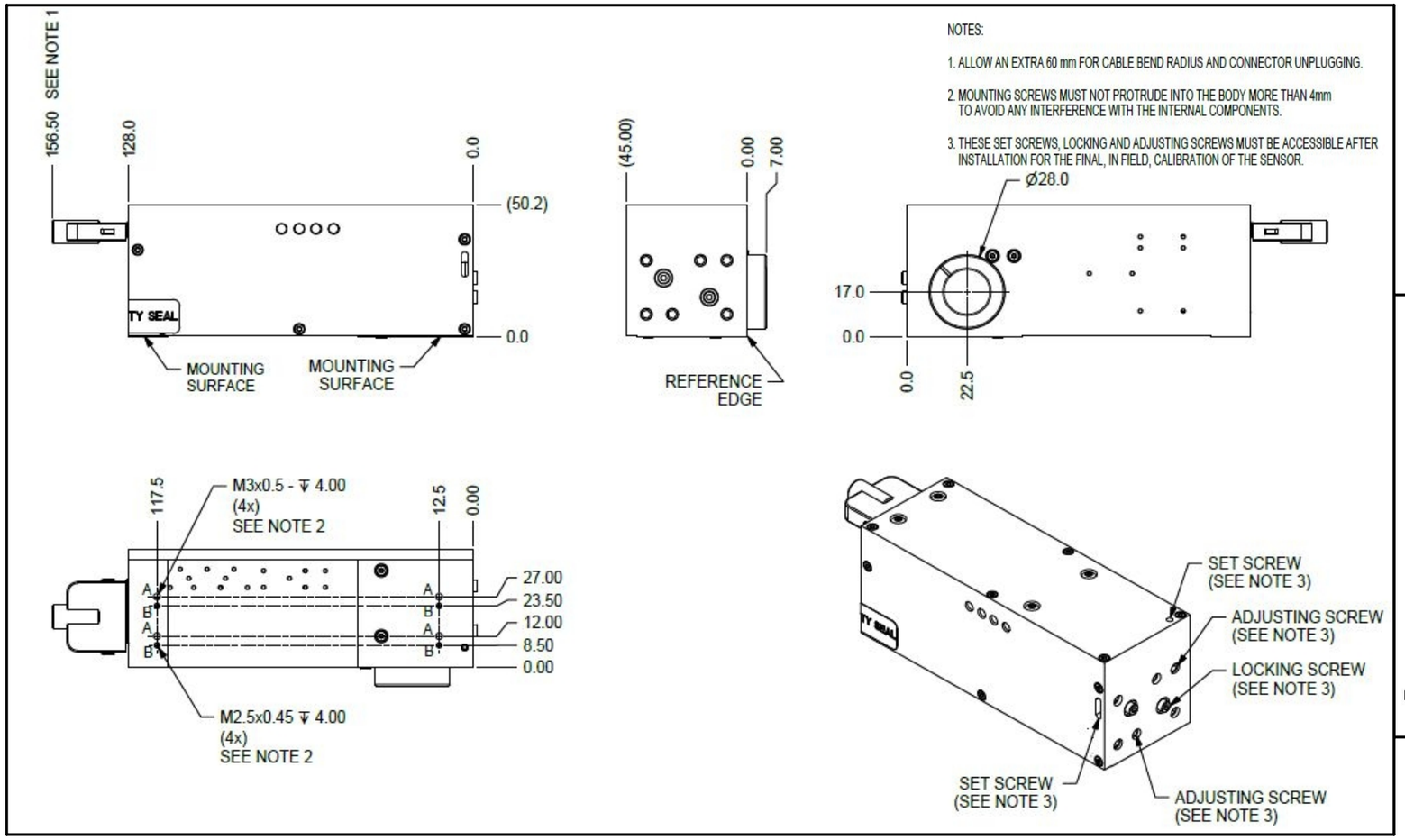

sensor

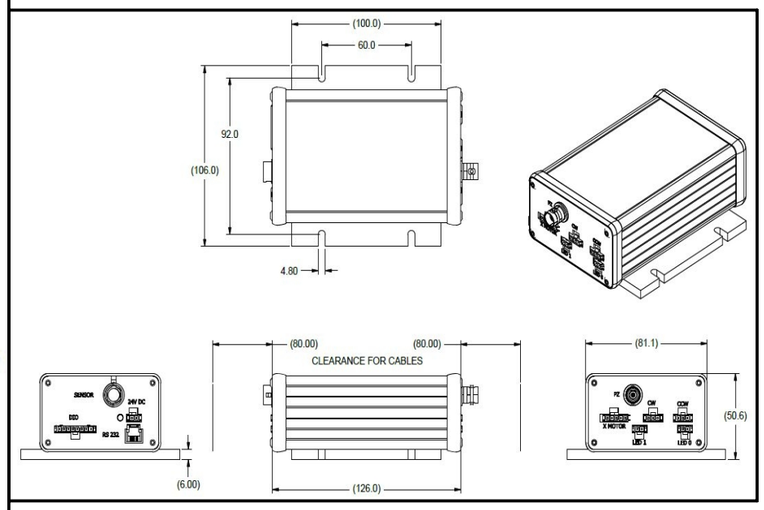

controller

Order number: 2421-004-274-00

Specification - WDI - Autofocus sensor kit ATF6 SA PZ 785:

manufacturer:	WiseDeviceInc., Canada
sensor type:	ATF6 SA PZ
wavelength:	785 nm
controller:	WDI - MCX PZ
	20 - 28 VDC; max. 2.0 Amps
interface:	RS232
weight:	0.25 kg (sensor)
	0.4 kg (controller)
note:	kit includes controller, cables and connectors
	NO power supply included!
compatible actuator:	4401-535-822-01

NX	EU-D	AL-T1A	US-D	US-ML	not export controlled
				PDM Status Freigabe	Q Internal Use
PROTECTIVE NOTE "DIN ISO 16016" TO BE OBSERVED	REV c, ECC 20-0208, DATE 26.02.20, APPROVED Hornbog	GENERAL TOLERANCE OF DIMENSION, FORM, POS. ISO 2768-mH	SURF. TREATMT	SCALE –	
		BASIC TOLERANCING PRINCIPLE ISO 8015		MATERIAL 921370	
		FIRST ISSUE 18.02.20 Hornbogner		TITLE Autofocus-Kit ATF6 SA PZ 785 proposal drawing	
		CHKD 18.02.20 Neumann			
DIN A 3	ALL DIMENSIONS ARE IN MM AND INCLUDE SURFACE TREATMENT	QIOPTIQ		DRAWING NO. 2421-004-274-00-0002c	SHEET 2 OF 2
				REPLACES	